Cambridge Assessment International Education
Cambridge International General Certificate of Secondary Education (9–1)

CANDIDATE NAME	
CENTRE NUMBER	
CANDIDATE NUMBER	

PHYSICS **0972/41**

Paper 4 Theory (Extended) **May/June 2019**

1 hour 15 minutes

Candidates answer on the Question Paper.

No Additional Materials are required.

READ THESE INSTRUCTIONS FIRST

Write your centre number, candidate number and name on all the work you hand in.
Write in dark blue or black pen.
You may use an HB pencil for any diagrams or graphs.
Do not use staples, paper clips, glue or correction fluid.
DO **NOT** WRITE IN ANY BARCODES.

Answer **all** questions.
Electronic calculators may be used.
You may lose marks if you do not show your working or if you do not use appropriate units.
Take the weight of 1.0 kg to be 10 N (acceleration of free fall = 10 m/s^2).

At the end of the examination, fasten all your work securely together.
The number of marks is given in brackets [ ] at the end of each question or part question.

This document consists of **18** printed pages and **2** blank pages.

DC (MM) 183077
© UCLES 2019

Cambridge Assessment International Education

www.root19.com +91 - 9969 353 391

1 A rocket is stationary on the launchpad. At time $t = 0$, the rocket engines are switched on and exhaust gases are ejected from the nozzles of the engines. The rocket accelerates upwards.

Fig. 1.1 shows how the acceleration of the rocket varies between time $t = 0$ and time $t = t_f$.

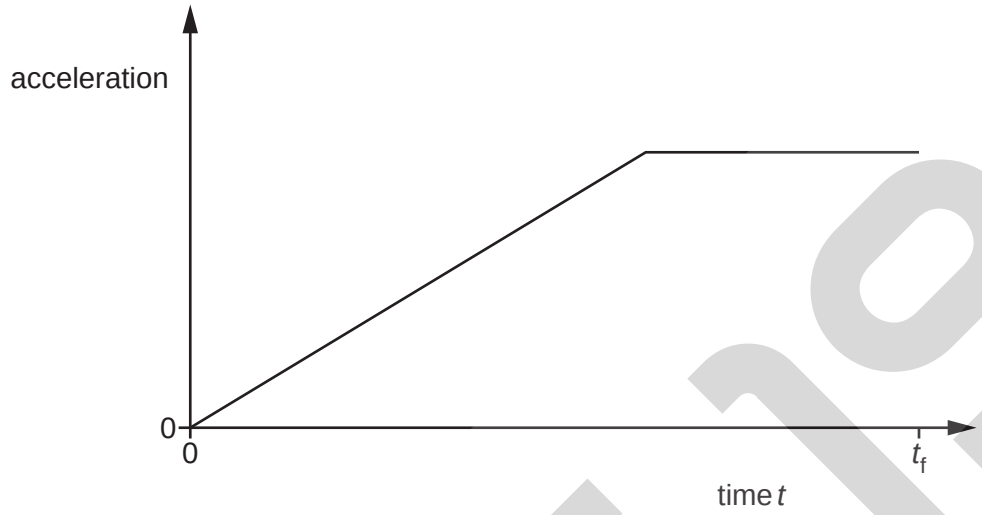

Fig. 1.1

(a) Define *acceleration*.

.....

..... [1]

(b) On Fig. 1.2, sketch a graph to show how the speed of the rocket varies between time $t = 0$ and time $t = t_f$.

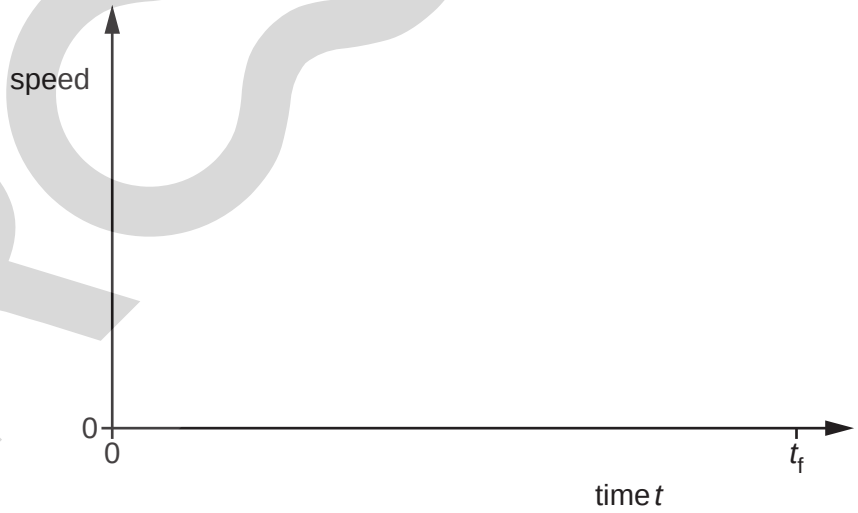

Fig. 1.2

[3]

www.root19.com +91 - 9969 353 391

(c) Some time later, the rocket is far from the Earth. The effect of the Earth's gravity on the motion of the rocket is insignificant. As the rocket accelerates, its momentum increases.

(i) State the principle of the conservation of momentum.

.....

.....

..... [2]

(ii) Explain how the principle of the conservation of momentum applies to the accelerating rocket and the exhaust gases.

.....

.....

.....

..... [2]

[Total: 8]

© UCLES 2019

www.root19.com +91 - 9969 353 301

2 Fig. 2.1 shows a sign that extends over a road.

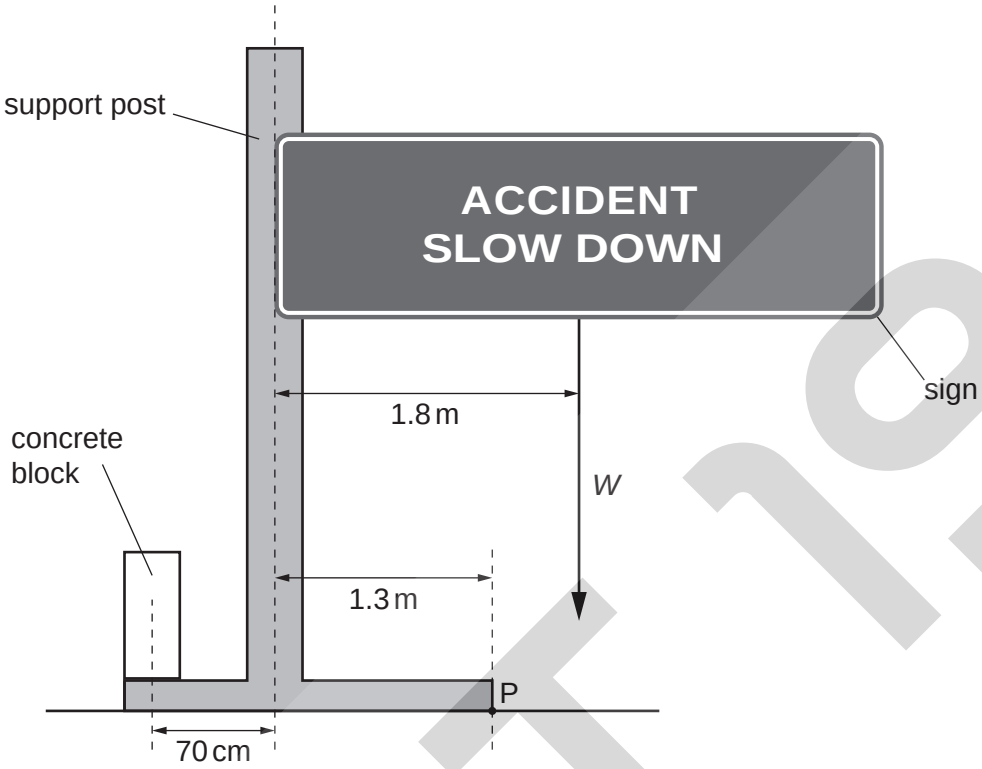

Fig. 2.1

The mass of the sign is 3.4×10^3 kg.

(a) Calculate the weight *W* of the sign.

W = ... [2]

(b) The weight of the sign acts at a horizontal distance of 1.8 m from the centre of the support post and it produces a turning effect about point P.

Point P is a horizontal distance of 1.3 m from the centre of the support post.

(i) Calculate the moment about P due to the weight of the sign.

moment = ... [3]

www.root19.com +91 - 9969 353 391

(ii) A concrete block is positioned on the other side of the support post with its centre of mass a horizontal distance of 70 cm from the centre of the support post.

1. State what is meant by *centre of mass*.

.....

..... [1]

2. The weight of the concrete block produces a moment about point P that exactly cancels the moment caused by the weight *W*.

Calculate the weight of the concrete block.

weight = ... [2]

(c) The concrete block is removed. The sign and support post rotate about point P in a clockwise direction.

State and explain what happens to the moment about point P due to the weight of the sign as it rotates.

.....

.....

..... [2]

[Total: 10]

www.root19.com +91 - 9969 353 301

3 A cube of side 0.040 m is floating in a container of liquid. Fig. 3.1 shows that the surface of the liquid is 0.028 m above the level of the bottom face of the cube.

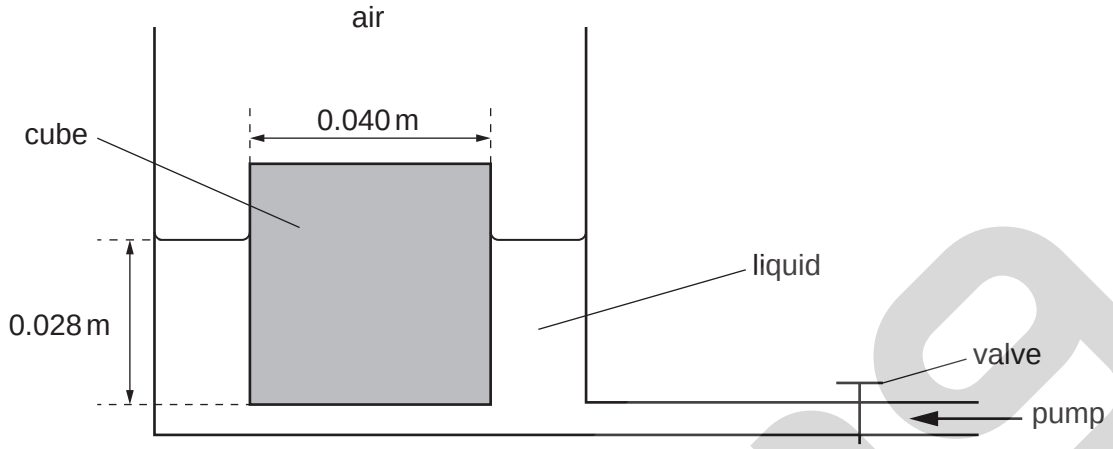

Fig. 3.1

The pressure of the air above the cube exerts a force on the top face of the cube. The valve is closed.

(a) Explain, in terms of air molecules, how the force due to the pressure of the air is produced.

.....

.....

.....

..... [3]

(b) The density of the liquid in the container is 1500 kg / m^3.

Calculate:

(i) the pressure due to the liquid at a depth of 0.028 m

pressure = ... [2]

(ii) the force on the bottom face of the cube caused by the pressure due to the liquid.

force = ... [2]

www.root19.com +91 - 9969 353 391

(c) The valve is opened and liquid is pumped into the container. The surface of the liquid rises a distance of 0.034 m.

The cube remains floating in the liquid with its bottom face 0.028 m below the surface of the liquid.

(i) Calculate the work done on the cube by the force in **(b)(ii)**.

work done = ... [2]

(ii) Suggest **one** reason why this is **not** an efficient method of lifting up the cube.

.....

..... [1]

[Total: 10]

© UCLES 2019
www.root19.com

+91 - 9969 353 301

4 Gas of mass 0.23 g is trapped in a cylinder by a piston. The gas is at atmospheric pressure which is 1.0×10^5 Pa. Fig. 4.1 shows the piston held in position by a catch.

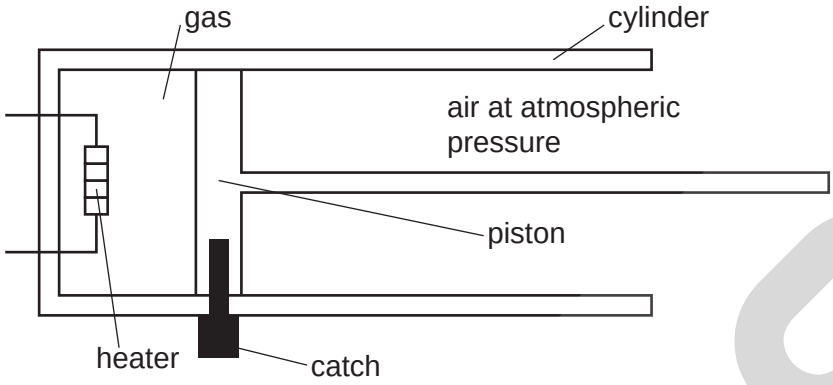

Fig. 4.1

The volume of the trapped gas is 1.9×10^{-4} m^3.

An electrical heater is used to increase the temperature of the trapped gas by 550 °C.

(a) The specific heat capacity of the gas is 0.72 J/(g °C).

(i) Calculate the energy required to increase the temperature of the trapped gas by 550 °C.

energy = ... [2]

(ii) The power of the heater is 2.4 W.

1. Calculate how long it takes for the heater to supply the energy calculated in **(a)(i)**.

time = ... [2]

2. In practice, it takes much longer to increase the temperature of the gas by 550 °C using the heater.

Suggest **one** reason for this.

.....

.....

..... [1]

www.root19.com +91 - 9969 353 391

(b) When the temperature of the gas has increased by 550 °C, its pressure is 2.9×10^5 Pa. The catch is then released allowing the piston to move. As the piston moves, the temperature of the gas remains constant.

(i) State and explain what happens to the piston.

.....

.....

..... [2]

(ii) Determine the volume of the gas when the piston stops moving.

volume = ... [2]

[Total: 9]

ROOT 19

www.root19.com +91 - 9969 353 301

5 Liquids and gases are two states of matter.

(a) In both boiling and evaporation, a liquid changes into a gas.

(i) State **two** ways in which boiling differs from evaporation.

1. .....

.....

2. .....

..... [2]

(ii) Before injecting a patient, a doctor wipes a small amount of a volatile liquid on to the patient's skin.

Explain, in terms of molecules, how this procedure cools the patient's skin.

.....

.....

.....

.....

..... [4]

(b) Gases can be compressed but liquids are incompressible.

Explain, in terms of molecules, why liquids are incompressible.

.....

.....

..... [2]

[Total: 8]

© UCLES 2019
www.root19.com

+91 - 9969 353 391

BLANK PAGE

© UCLES 2019
www.root19.com

+91 - 9969 353 301

6 Green light of frequency 5.7×10^{14} Hz is travelling in air at a speed of 3.0×10^{8} m/s. The light is incident on the surface of a transparent solid.

Fig. 6.1 shows the wavefronts and the direction of travel of the light in the air.

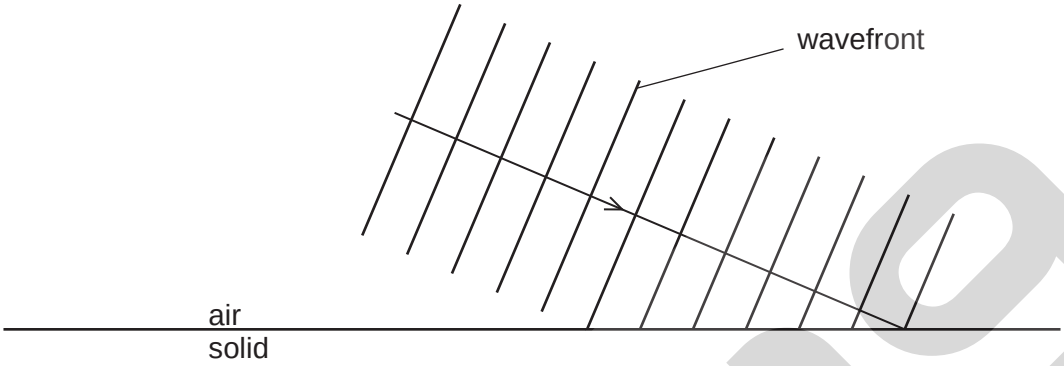

Fig. 6.1

The light travels more slowly in the transparent solid.

(a) Explain, in terms of the wavefronts, why the light changes direction as it enters the solid. You may draw on Fig. 6.1 as part of your answer.

.....

.....

.....

..... [3]

(b) The refractive index of the transparent solid is 1.3.

(i) The light is incident on the surface of the solid at an angle of incidence of 67°.

Calculate the angle of refraction of the light in the solid.

angle of refraction = ... [2]

www.root19.com +91 - 9969 353 391

(ii) Determine the wavelength of the green light in the transparent solid.

wavelength = ... [4]

[Total: 9]

© UCLES 2019

www.root19.com
+91 - 9969 353 301

7 Fig. 7.1 shows a circuit diagram that includes component X.

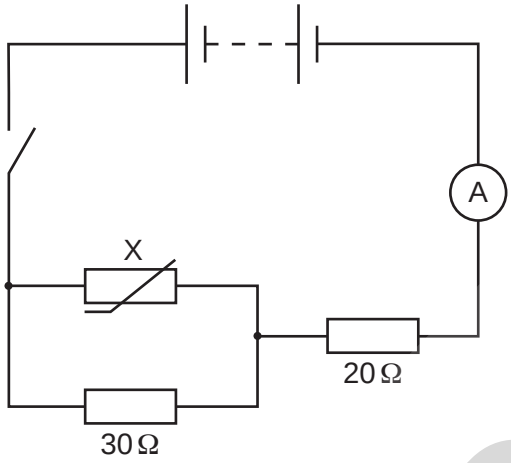

Fig. 7.1

(a) State the name of component X.

..... [1]

(b) The electromotive force (e.m.f.) of the battery is E. The switch is closed.

The potential difference (p.d.) across the 30 Ω resistor is V_{30}.
The p.d. across the 20 Ω resistor is V_{20}.
The p.d. across component X is V_X.

State an equation that relates V_X to:

(i) V_{30}

..... [1]

(ii) E and V_{20}.

..... [1]

www.root19.com +91 - 9969 353 391

(c) The e.m.f. of the battery is 6.0 V and the resistance of component X is 15 Ω.

Calculate:

(i) the total resistance of the circuit

resistance = ... [3]

(ii) the ammeter reading.

reading = ... [2]

(d) The temperature of component X increases.

State and explain what happens to the ammeter reading.

.....

.....

..... [2]

[Total: 10]

www.root19.com +91 - 9969 353 301

8 A student turns the handle of an alternating current (a.c.) generator and the coil rotates.

Fig. 8.1 represents the structure of the a.c. generator.

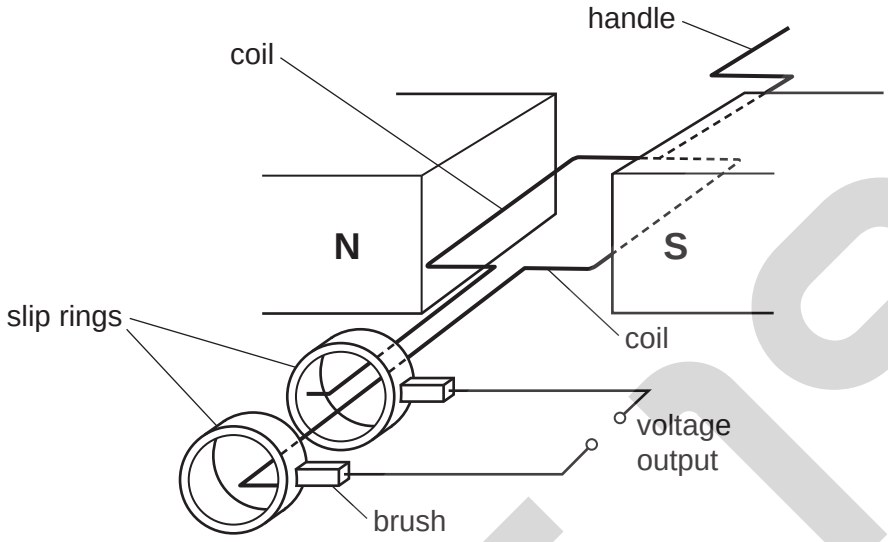

Fig. 8.1

(a) There is an alternating voltage output between the two terminals.

(i) Explain why rotating the coil produces an output voltage.

.....

.....

.....

..... [3]

(ii) State the position of the rotating coil when the alternating output voltage is at a maximum value and explain why the maximum output occurs at this position.

.....

.....

..... [2]

www.root19.com +91 - 9969 353 391

(b) A lamp and an open switch are connected in series to the output terminals of the a.c. generator.

The switch is closed and the lamp lights up. The student has to apply a greater force on the handle.

Explain why a greater force is needed to keep the lamp lit.

.....

.....

.....

..... [3]

[Total: 8]

© UCLES 2019
www.root19.com

+91 - 9969 353 301

9 **(a)** Fig. 9.1 shows a beam of α-particles moving towards a thin sheet of gold in a vacuum.

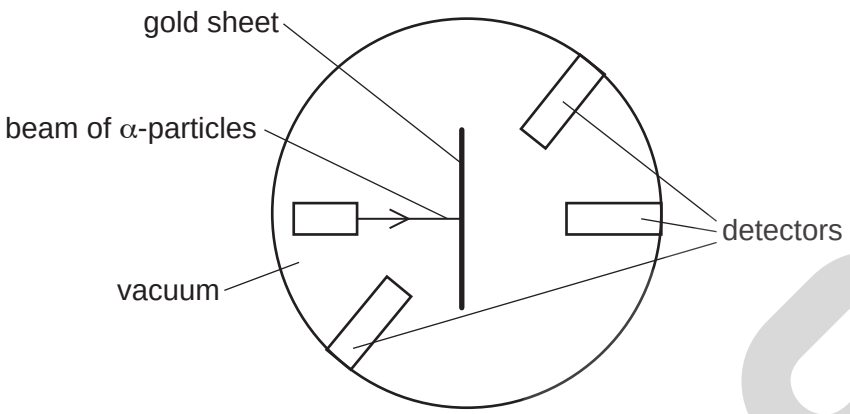

Fig. 9.1

Detectors in the region surrounding the thin gold sheet detect the α-particles and determine the number of particles that travel in various directions.

State and explain what can be deduced from the following observations.

(i) The majority of the α-particles pass through the gold sheet undeflected and are detected on the far side.

deduction .....

explanation .....

..... [2]

(ii) A small number of α-particles are deflected as they pass through the gold sheet.

deduction .....

explanation .....

..... [2]

(iii) A very small number of α-particles are deflected through very large angles or return back the way they came.

deduction .....

explanation .....

..... [2]

www.root19.com +91 - 9969 353 391

(b) A beam that consists of both α-particles and β-particles is passed through a region of space where there is a magnetic field perpendicular to the direction of the beam.

State **two** ways in which the deflection of the α-particles differs from that of the β-particles.

1. .....

2. .....
[2]

[Total: 8]

© UCLES 2019
www.root19.com

+91 - 9969 353 391

BLANK PAGE

Permission to reproduce items where third-party owned material protected by copyright is included has been sought and cleared where possible. Every reasonable effort has been made by the publisher (UCLES) to trace copyright holders, but if any items requiring clearance have unwittingly been included, the publisher will be pleased to make amends at the earliest possible opportunity.

To avoid the issue of disclosure of answer-related information to candidates, all copyright acknowledgements are reproduced online in the Cambridge Assessment International Education Copyright Acknowledgements Booklet. This is produced for each series of examinations and is freely available to download at www.cambridgeinternational.org after the live examination series.

Cambridge Assessment International Education is part of the Cambridge Assessment Group. Cambridge Assessment is the brand name of the University of Cambridge Local Examinations Syndicate (UCLES), which itself is a department of the University of Cambridge.

www.root19.com +91 - 9969 353 391